Medium Load Strap Hinges

INSTALLATION INSTRUCTIONS

Please review ALL diagrams and instructions in full prior to beginning installation.

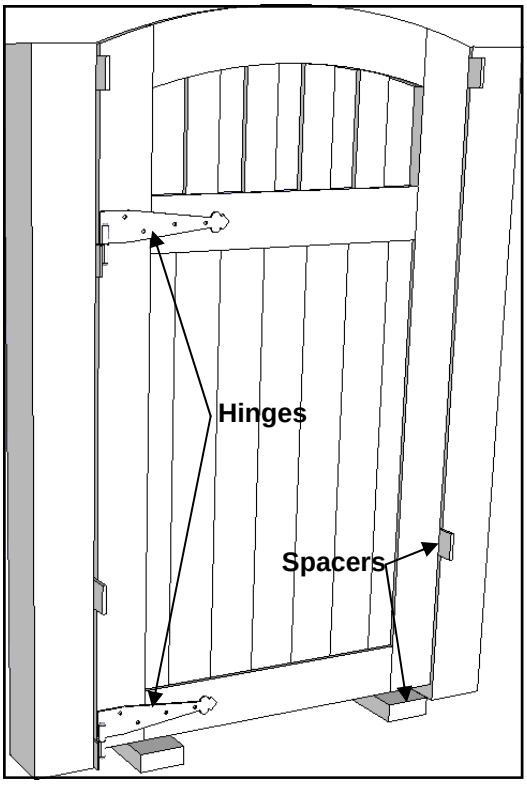

HINGE INSTALLATION

Install hinges before latching is installed.

1) Place gate in opening using spacers at sides and bottom to achieve necessary gaps.
2) Position hinge straps on gate in appropriate location—typically centered on the horizontal rails—making sure that the female portion of the hinges align with one another. Mark each screw hole with a pencil. **NOTE**: Bottom hinge should be placed with pintle in place to ensure necessary ground clearance is being achieved.
3) Pre-drill each marked hole location. Mount straps to gate using hex head screws provided. Take care not to scratch powder coating. Do not over tighten and strip threads.
4) Re-position gate and, with each hinge assembled (hinge straps fully joined with hinge pins on pintle plates, and bronze bushings in place), mark the location of the pintle plates on the post/jamb. Remove gate and holding pintle plates in position, mark each hole location with a pencil.
5) Pre-drill each marked hole location. Mount pintle plates using flat head screws provided. Do not over tighten and strip threads. Take care not to scratch powder coating.
6) Place bronze bushings. Hang gate by lowering hinge straps over the pintles. Grease the fitting on each hinge with a grease gun and bearing grease. Failure to grease hinges will result in corrosion over time and hinge will become damaged.

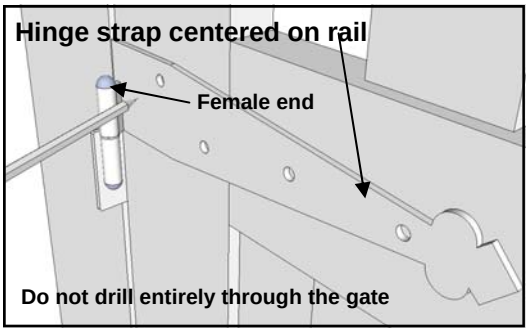

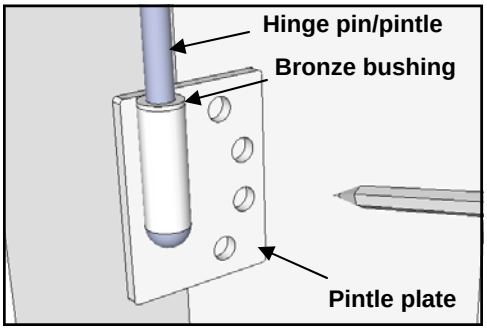

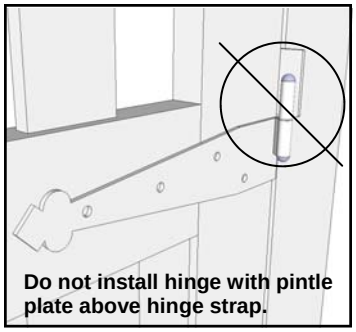

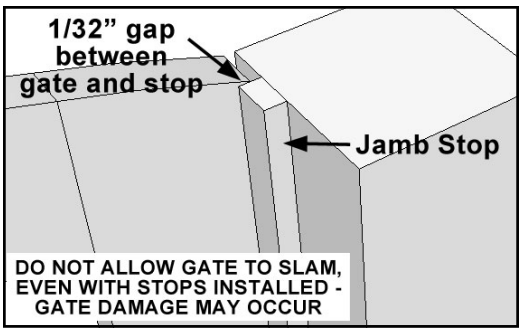

STOP INSTALLATION

Failure to install gate stops will void warranties.

1) Cut stop to be at least as long as the gate's edge height.
2) Mount stops to posts (or jambs, if applicable) using screws and/or weatherproof wood glue (such as Titebond III). Position stop with 1/32" gap between face of gate and stop when gate is closed.

Twisted Ring Gate Latch, Street Swing

INSTALLATION INSTRUCTIONS

Please review ALL diagrams and instructions in full prior to beginning installation.
Use this instruction in place of those inside of the hardware box.

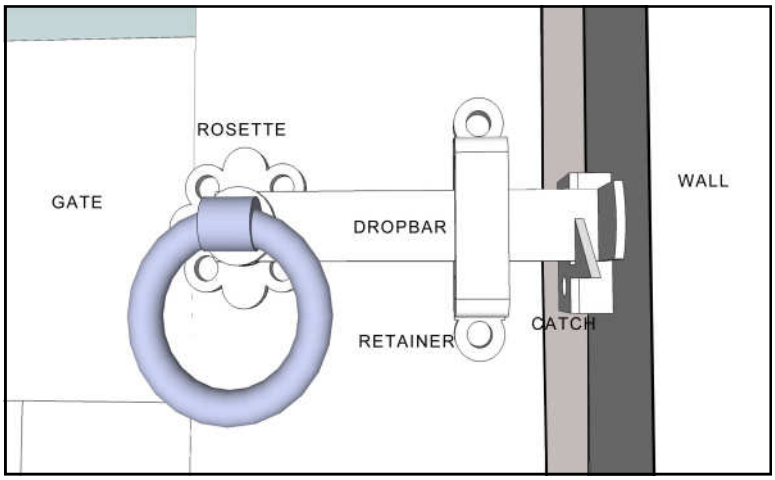

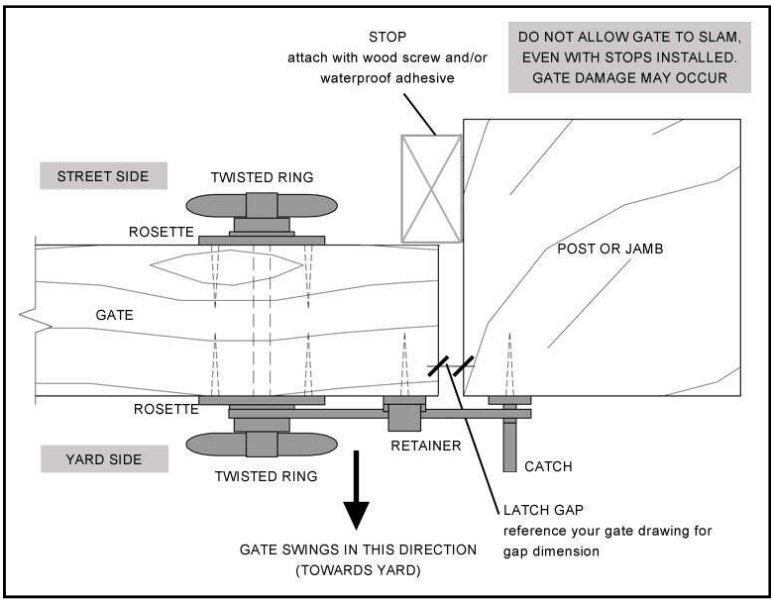

LATCH INSTALLATION

Install Latch after gate and hinges are installed.

1) Drill a one inch diameter hole in the gate stile (upright) at the location needed. Care must be taken to ensure that the rotating part of the rosette is not pressed against the wood of the stile. This would prevent free rotation of the ring.
2) Cut the square rod 7/8" longer than the thickness of the gate stile.
3) Insert the square rod into one of the rosettes and screw it to the gate ensuring that the square rod is centered in the hole.
4) Place the rosette over the square rod and screw it to the opposite side of the gate using 1" #8 screws. Make sure that the rosettes are aligned squarely to ensure free rotational movement.
5) Attach the bar retainer guide to the gate near the edge of the gate (use 1-1/2" #8 screws). It should be installed so that the horizontal bar is level and resting on the bottom of the bar retainer guide.
6) Screw the catch on the post parallel and at the same level as the bar retainer guides (use 1-1/2" #8 screws).

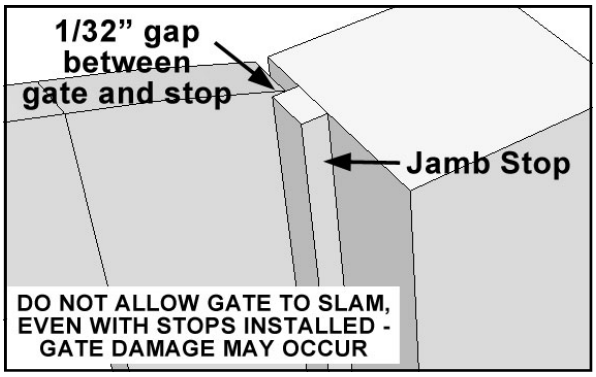

STOP INSTALLATION

Failure to install gate stops will void warranties.

1) Cut stop to be at least as long as the gate's edge height. Stop will need to be split into two pieces. One above the latch bar and one below.
2) Mount stops to posts (or jambs, if applicable) using screws and/or weatherproof wood glue (such as Titebond III). Position stop with 1/32" gap between face of gate and stop when gate is closed.

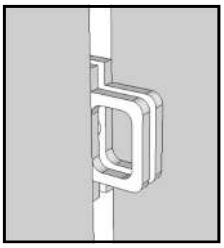

PADLOCK EYES INSTALLATION

Optional - If Gate needs to be locked

1) Install one padlock eye on the inside edge of the latch post/jamb and the other on the gate edge. The two should align when door is in closed. Mark hole locations and pre-drill for screws. Attach padlock eyes using fasteners provided. Padlock not included.

Posts

INSTALLATION INSTRUCTIONS

Please review ALL diagrams and instructions in full prior to beginning installation.

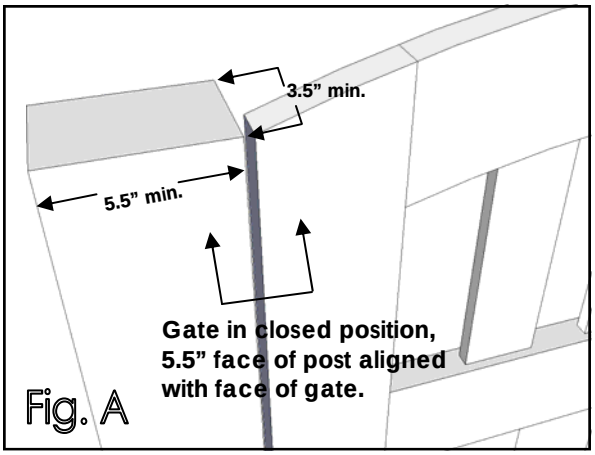

Fig. A

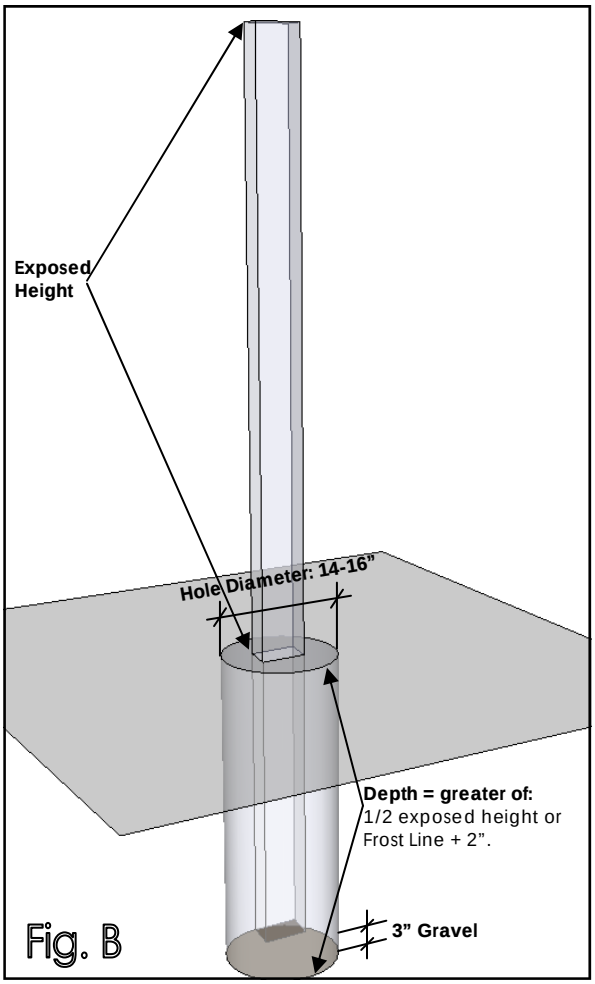

Fig. B

- Pedestrian gates are up to 4' wide and up to 7' tall.
- Gate and posts should be aligned as needed to accommodate hinges and / or latching mechanisms. Refer to appropriate installation instructions and / or design documents prior to beginning installation.
- Pressure treated posts are recommended for sub-grade post installation.

POST INSTALLATION

Install posts before gate and hinges are installed.

1) Post size for pedestrian gates: 4x6 minimum; 6x6 preferred (actual dimensions: 3.5" x 5.5" and 5.5" x 5.5"). If using a 4x6 post, the 5.5" face must be in line with the gate (if looking at the gate in the closed position, you will see the 5.5" face). See Fig A. If your gate is 4' - 5' wide and 4' - 7' tall, use a 6x6 post, minimum.
2) Footing Depth for Post: the footing should be equal to the <u>greater</u> of **A** or **B**.
   A: <u>1/2 of exposed post height.</u> If exposed post height is 72", A = 36". Minimum 20".
   B: <u>Local Frost line +2"</u> (the local frost line can be found by contacting your local building department).
3) Hole diameter: 14" minimum; 16" preferred, for 4x6 or 6x6 post. See Fig B.
4) Footing: set post in a concrete footing over a 3" thick bed of gravel to allow for drainage and inhibit rotting of wood post. See Fig B.
5) Posts must be plumb. If you have ordered a gate from us, refer to your approved design documents for the appropriate post-to-post (opening) distance.

Jambs

INSTALLATION INSTRUCTIONS

Please review ALL diagrams and instructions in full prior to beginning installation.

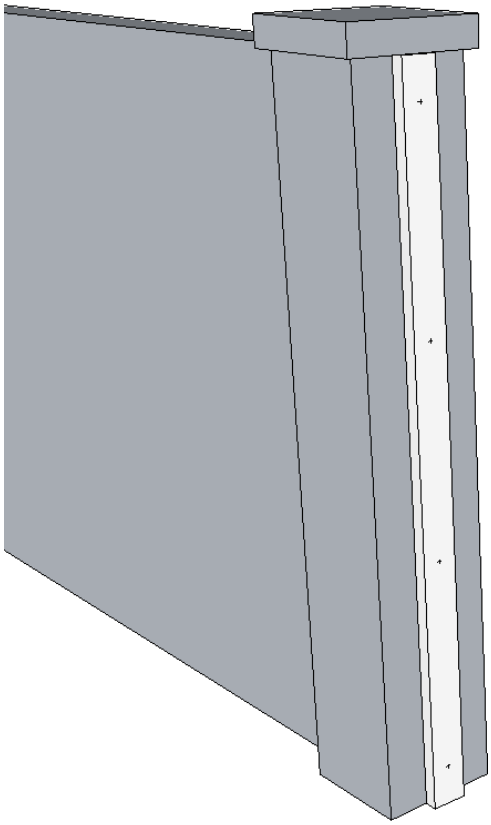

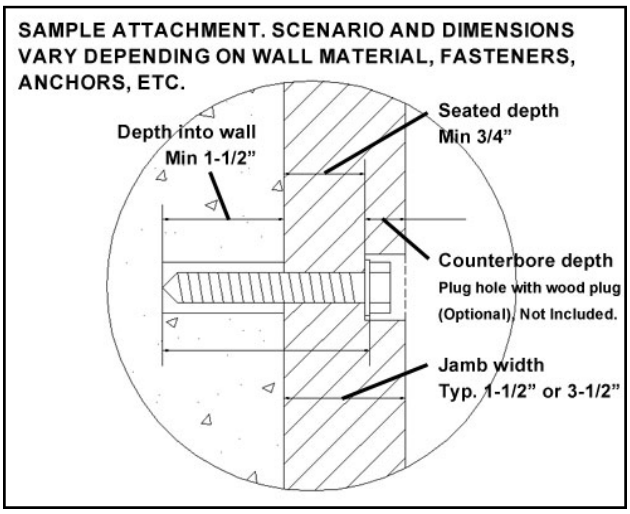

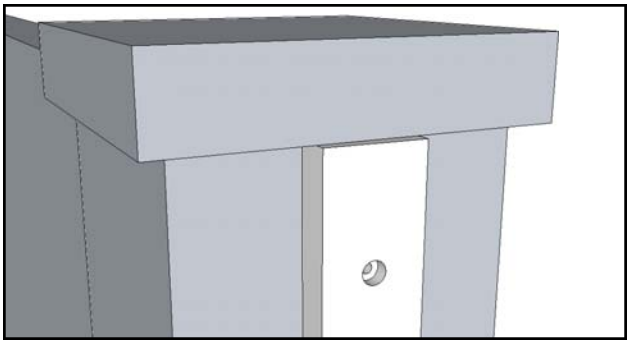

- Due to the wide range of surfaces, fasteners are not provided.
- For masonry applications, 3/8" Hex Head Lag Bolts with 3/8" washers and proper anchors/shields are common to mount the jambs. Other anchoring systems may be suitable. Follow manufacturers instructions.
- If the walls/posts are not plumb, you can shim the jambs as needed during installation to remedy.
- Use one (1) bolt and anchor system for every 20" - 24" of jamb height.

JAMB INSTALLATION

Install jambs before gate and hinges are installed.

1) Place gate in opening using spacers at sides and bottom to achieve necessary gaps.
2) Cut jamb to necessary length and determine position on wall/post. Mark bolt locations: bolts should be 4-6" from top and bottom edges. Remaining bolts should be evenly spaced between. <u>Adjust bolt location if necessary to allow for proper hinge placement. If your jambs were pre-mortised for you, be sure you are installing the correct jamb on the correct side of the opening. Refer to your design documents if applicable.</u>
3) At each marked bolt location, counter bore for bolt head to a minimum depth of 5/16". Required depth may be greater.
4) At center of each drilled location, using necessary diameter drill bit for shaft of bolt, drill through remaining jamb thickness.
5) Position jambs against wall/post and using jambs as a template, mark each hole location on the wall/post. Remove jamb. At each marked location, drill hole in wall according to anchor type and size (marked on anchor or anchor packaging). Bolt depth into wall/post should typically be at least 1-1/2"
6) Insert anchors in wall/post. Position jamb against wall, aligning holes in jamb with holes in wall.
7) Screw each hex head bolt through washer and jamb and into anchors. Use socket wrench to tighten. Do not over tighten.