Butt Hinges

INSTALLATION INSTRUCTIONS

Please review ALL diagrams and instructions in full prior to beginning installation.
Use this instruction in place of those inside of the hardware box.

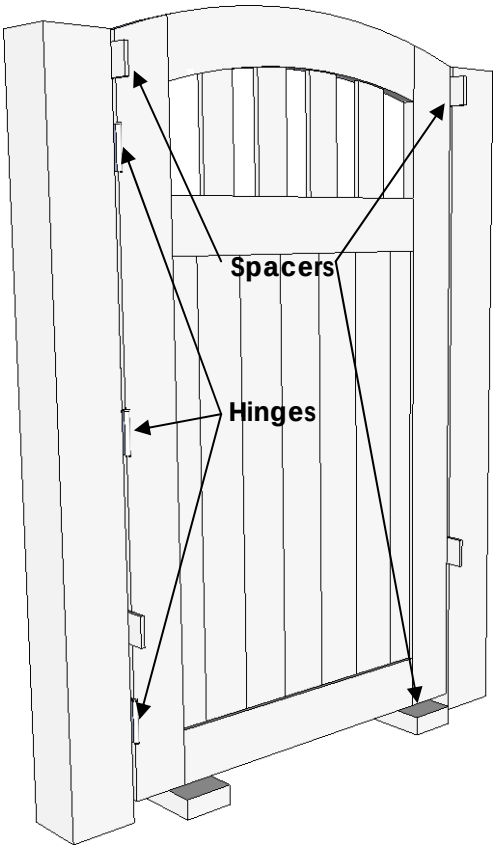

BUTT HINGE INSTALLATION

Install hinges before latching is installed.

1) Place gate in opening using spacers at sides and bottom to achieve necessary gaps.
2) The hinges will be positioned along edge of gate, evenly spaced, keeping about 4-8" from top and bottom of gate. Hinges must be vertically aligned with one another. If you have pre-mortised butt hinges, the hinge locations on the gate and / or jamb will already be determined. Follow the remainder of the instructions accordingly.
3) Mark each hinge location on post/jamb with a pencil.
4) Remove gate and, holding each hinge in place on post/jamb where the first mark was made, mark each hole location with a pencil. Pre-drill each marked hole location. Mount hinge to post/jamb using fasteners provided.
5) Re-position gate as in step 2 and mark location of each hinge on gate.
6) Re-position gate in open position, using spacers to hold off ground proper distance. Align hinges with marked positions on gate edge. Mark each hole location with a pencil. Pre-drill each marked hole location. Mount hinges using fasteners provided.

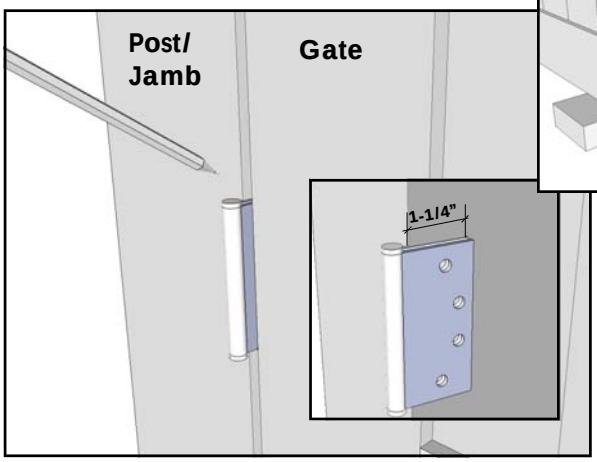

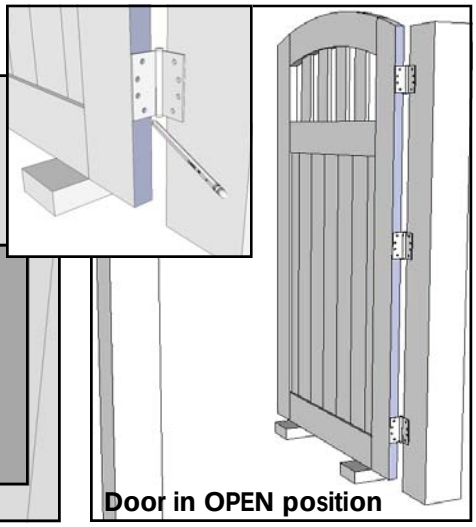

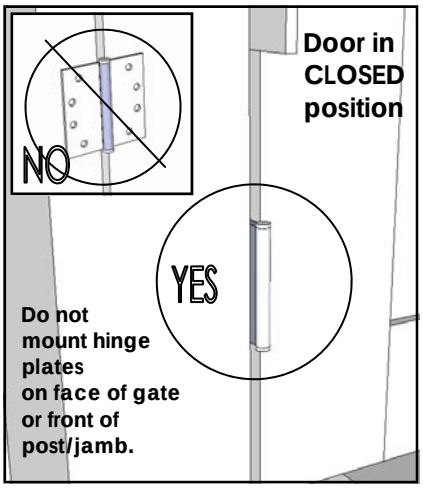

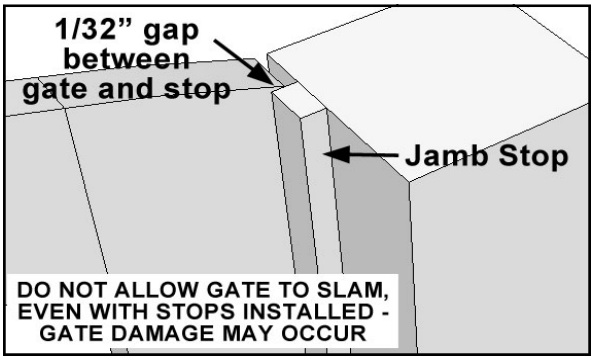

STOP INSTALLATION

Failure to install gate stops will void warranties.

1) Cut stop to be at least as long as the gate's edge height.
2) Mount stops to posts (or jambs, if applicable) using screws and/or weatherproof wood glue (such as Titebond III). Position stop with 1/32" gap between face of gate and stop when gate is closed.

Self-Closing Butt Hinges

INSTALLATION INSTRUCTIONS

Please review ALL diagrams and instructions in full prior to beginning installation.
Use this instruction in place of those inside of the hardware box.

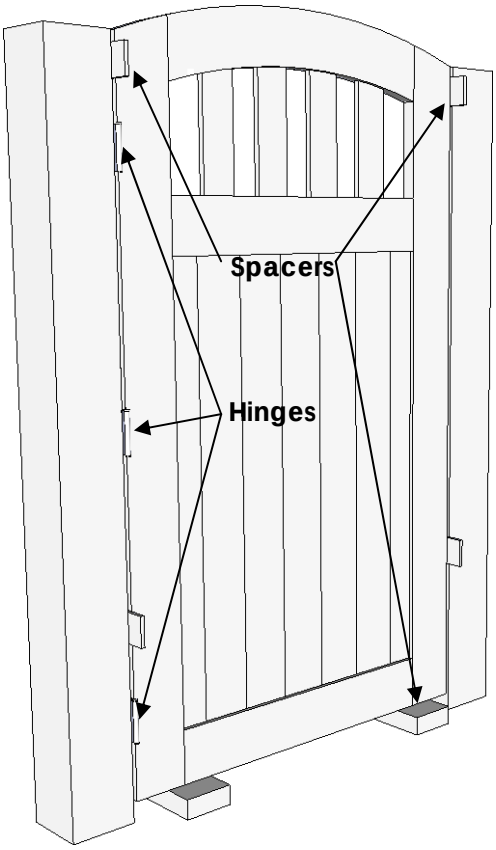

BUTT HINGE INSTALLATION

Install hinges before latching is installed.

1) Place gate in opening using spacers at sides and bottom to achieve necessary gaps.
2) If using self-closing butt hinges, install with adjustment keyhole facing up (located on one end of each hinge barrel). The hinges will be positioned along edge of gate, evenly spaced, keeping about 4-8" from top and bottom of gate. Hinges must be vertically aligned with one another. If you have pre-mortised butt hinges, the hinge locations on the gate and / or jamb will already be determined. Follow the remainder of the instructions accordingly.
3) Mark each hinge location on post/jamb with a pencil.
4) Remove gate and, holding each hinge in place on post/jamb where the first mark was made, mark each hole location with a pencil. Pre-drill each marked hole location. Mount hinge to post/jamb using fasteners provided.
5) Re-position gate as in step 2 and mark location of each hinge on gate.
6) Re-position gate in open position, using spacers to hold off ground proper distance. Align hinges with marked positions on gate edge. Mark each hole location with a pencil. Pre-drill each marked hole location. Mount hinges to gate using fasteners provided.
7) After installation, set each hinge at the lowest spring tension using the tension hex wrench to slowly turn the adjustment keyhole clockwise. When the hole on the side of the hinge barrel aligns, insert the small silver locking pin. Test spring tension. If needed, repeat process incrementally until desired tension is achieved. Keep tension setting consistent between hinges.

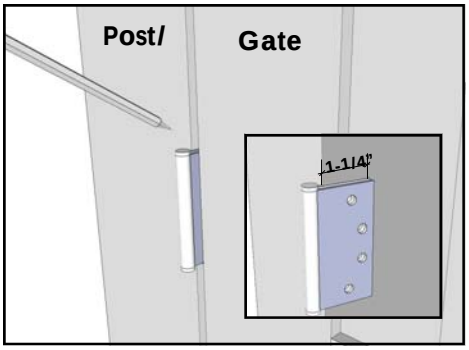

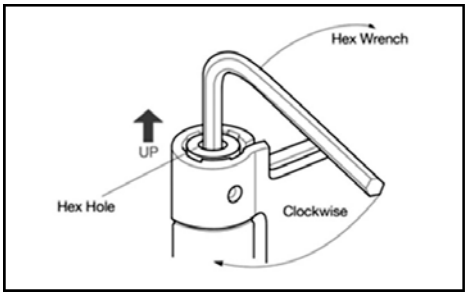

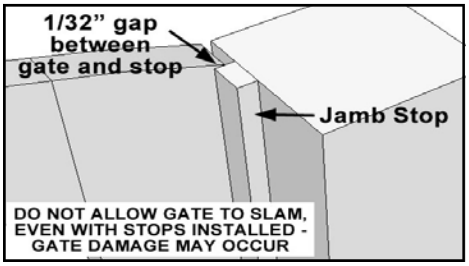

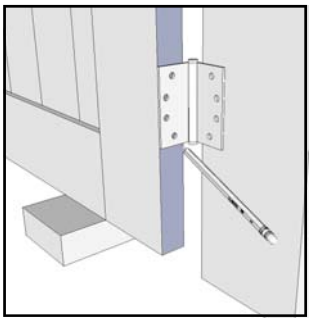

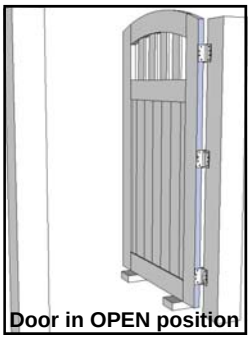

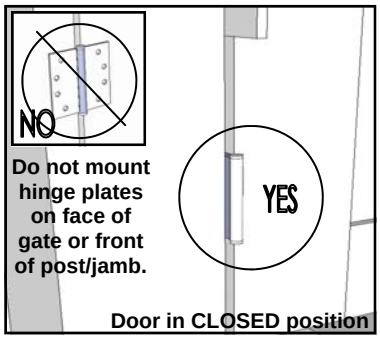

STOP INSTALLATION

Failure to install gate stops will void warranties.

1) Cut stop to be at least as long as the gate's edge height.
2) Mount stops to posts (or jambs, if applicable) using screws and/or weatherproof wood glue (such as Titebond III). Position stop with 1/32" gap between face of gate and stop when gate is closed.

Hampton Thumb Latch, Yard Swing

INSTALLATION INSTRUCTIONS

Please review ALL diagrams and instructions in full prior to beginning installation.
Use this instruction in place of those inside of the hardware box.

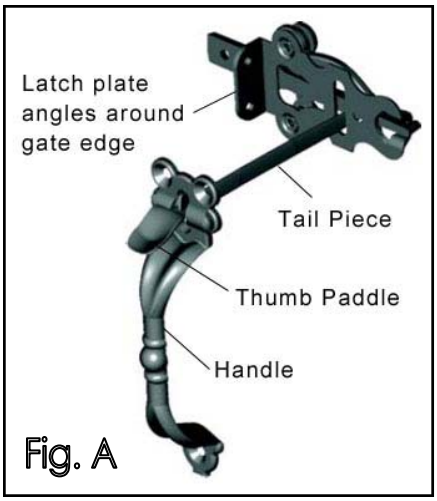

Fig. A

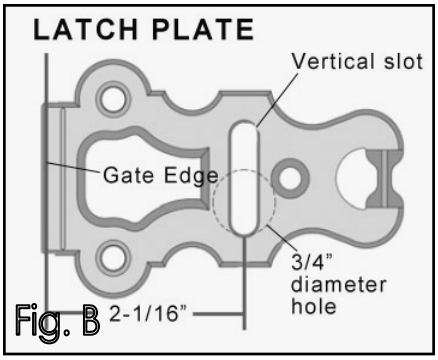

Fig. B

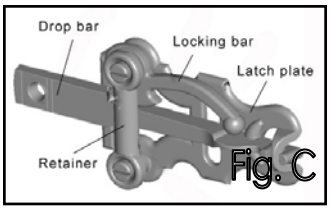

Fig. C

Fig. D

PADLOCK EYES INSTALLATION

Optional - If Gate needs to be locked

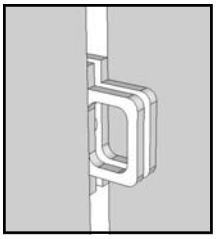

1) Install one padlock eye on the inside edge of the latch post/ jamb and the other on the gate edge. The two should align when door is in closed. Mark hole locations and pre-drill for screws. Attach padlock eyes using fasteners provided. Padlock not included.

LATCH INSTALLATION

Install Latch after gate and hinges are installed.

1) At the desired height, use the latch plate as a template. Place it on the side of the gate that will be flush with the posts. Use a pencil to trace around the inside of the vertical slot in the latch plate on the gate.
2) Mark a drilling center that is 3/8" above the bottom of the slot marked on the gate and mid way between the two sides of the slot. (Center of hole should be 2 1/16" from the edge of the gate). Always drill from the latch plate side of the gate.
3) Drill a single 3/4" hole through the gate avoiding excessive break out on the other side. (The entire slot does not have to be drilled out)
4) Install the latch plate on the gate ensuring the bottom of the slot is level with the bottom of the drilled hole. Install 2 (1.0" x #8) screws in the end of the latch plate into the edge of the gate. Then install 1 (1.0" x #8) into the countersunk hole on the face of the latch plate.
5) Install latch bar so that the thin end is tucked under the loop in the latch plate. (Start with the bar perpendicular to the plate, tuck the first tooth behind the loop, and drop the latch bar toward the latch plate until it is resting on it and between the two round protrusions on the latch plate.
6) Place the locking bar on the top round protrusion as per the diagram.
7) Place the retainer so that the small rectangular protrusion on the back is facing down and is installed below the latch bar. Fasten the retainer to the gate using 2(2.0" x # 12) screws.
8) Install the thumb bar into the back of the handle by pushing the thumb knob through the handle and rotating it 90 degrees. The two pins on the thumb bar will then sit in the recesses on the back of the handle.
9) Push the curved end of the thumb bar through the hole in the gate so that it extends through the slot in the latch plate underneath the latch bar. Install the handle so that the bar is in center of the hole (use 3 (1.25" x #10) screws)
10) Push the gate to the closed position and mark the gate post at the point where the bottom of the latch bar touches the post.
11) Install the catch plate on the inside face of the gate post using 2 (1.5" x #8) screws, so that the bottom of the slot is 1/4" below the mark made in #12 above.

STOP INSTALLATION

Failure to install gate stops will void warranties.

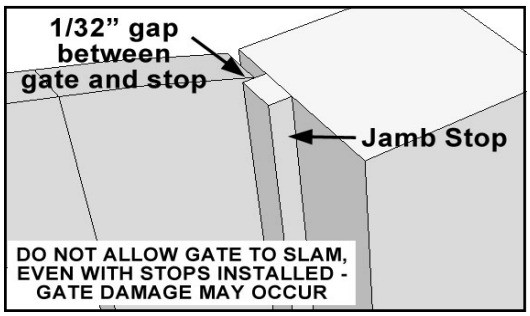

1) Cut stop to be at least as long as the gate's edge height.
2) Mount stops to posts (or jambs, if applicable) using screws and/or weather-proof wood glue (such as Titebond III). Position stop with 1/32" gap between face of gate and stop when gate is closed.

Posts

INSTALLATION INSTRUCTIONS

Please review ALL diagrams and instructions in full prior to beginning installation.

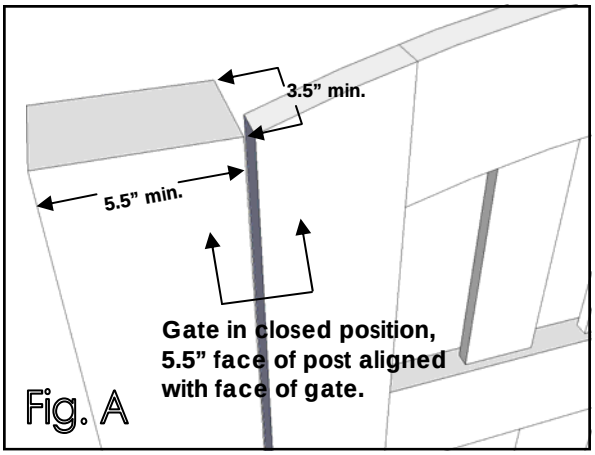

Fig. A

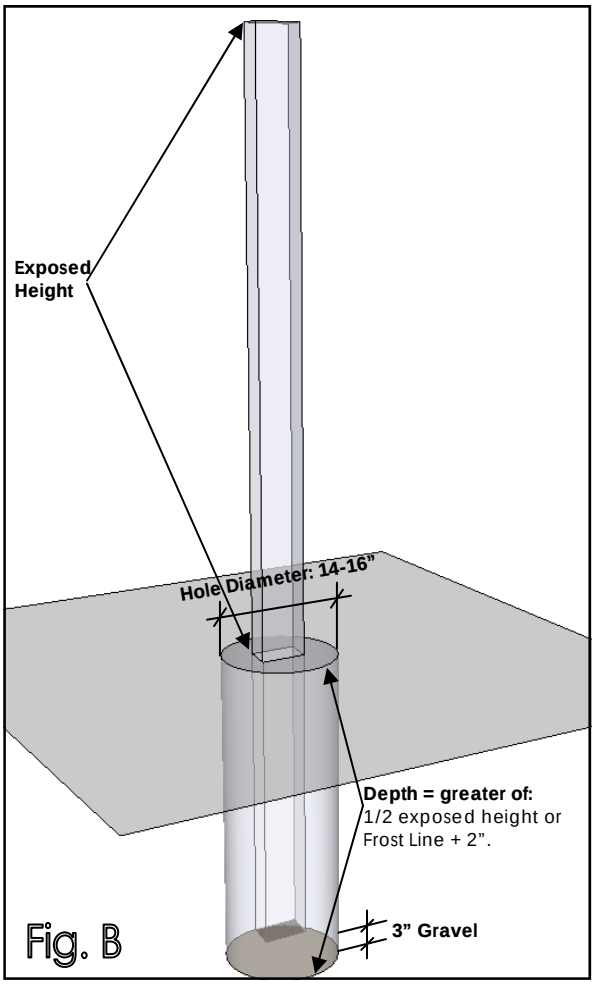

Fig. B

- Pedestrian gates are up to 4' wide and up to 7' tall.
- Gate and posts should be aligned as needed to accommodate hinges and / or latching mechanisms. Refer to appropriate installation instructions and / or design documents prior to beginning installation.
- Pressure treated posts are recommended for sub-grade post installation.

POST INSTALLATION

Install posts before gate and hinges are installed.

1) Post size for pedestrian gates: 4x6 minimum; 6x6 preferred (actual dimensions: 3.5" x 5.5" and 5.5" x 5.5"). If using a 4x6 post, the 5.5" face must be in line with the gate (if looking at the gate in the closed position, you will see the 5.5" face). See Fig A. If your gate is 4' - 5' wide and 4' - 7' tall, use a 6x6 post, minimum.
2) Footing Depth for Post: the footing should be equal to the <u>greater</u> of **A** or **B**.
   A: <u>1/2 of exposed post height.</u> If exposed post height is 72", A = 36". Minimum 20".
   B: <u>Local Frost line +2"</u> (the local frost line can be found by contacting your local building department).
3) Hole diameter: 14" minimum; 16" preferred, for 4x6 or 6x6 post. See Fig B.
4) Footing: set post in a concrete footing over a 3" thick bed of gravel to allow for drainage and inhibit rotting of wood post. See Fig B.
5) Posts must be plumb. If you have ordered a gate from us, refer to your approved design documents for the appropriate post-to-post (opening) distance.

Jambs

INSTALLATION INSTRUCTIONS

Please review ALL diagrams and instructions in full prior to beginning installation.

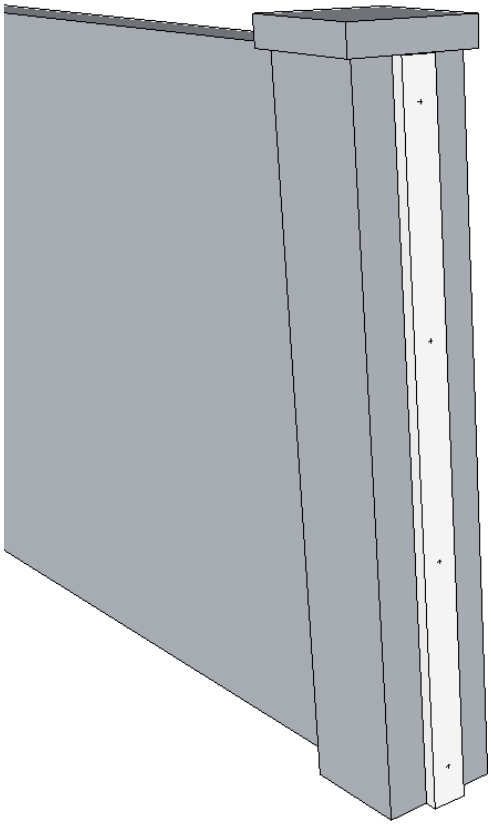

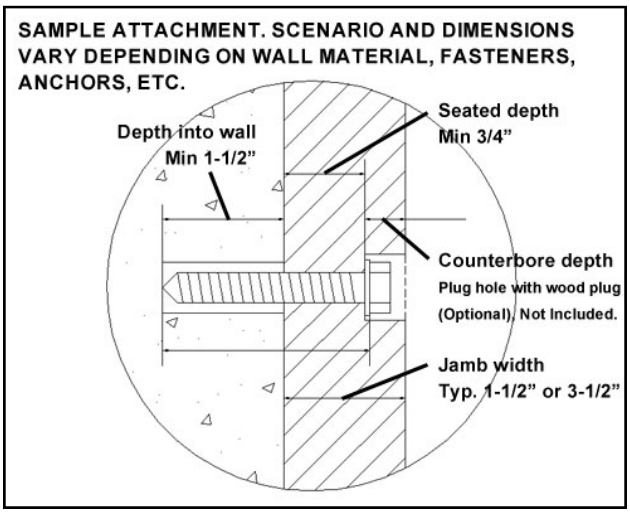

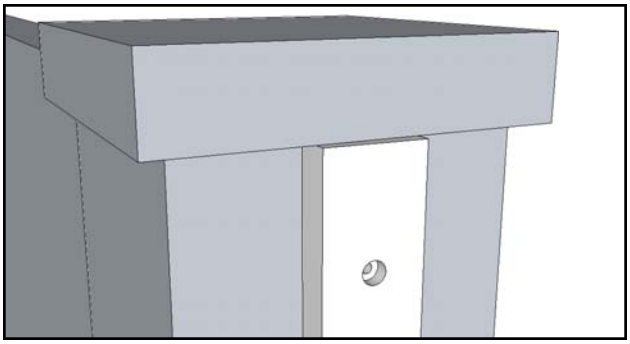

- Due to the wide range of surfaces, fasteners are not provided.
- For masonry applications, 3/8" Hex Head Lag Bolts with 3/8" washers and proper anchors/shields are common to mount the jambs. Other anchoring systems may be suitable. Follow manufacturers instructions.
- If the walls/posts are not plumb, you can shim the jambs as needed during installation to remedy.
- Use one (1) bolt and anchor system for every 20" - 24" of jamb height.

JAMB INSTALLATION

Install jambs before gate and hinges are installed.

1) Place gate in opening using spacers at sides and bottom to achieve necessary gaps.
2) Cut jamb to necessary length and determine position on wall/post. Mark bolt locations: bolts should be 4-6" from top and bottom edges. Remaining bolts should be evenly spaced between. <u>Adjust bolt location if necessary to allow for proper hinge placement. If your jambs were pre-mortised for you, be sure you are installing the correct jamb on the correct side of the opening. Refer to your design documents if applicable.</u>
3) At each marked bolt location, counter bore for bolt head to a minimum depth of 5/16". Required depth may be greater.
4) At center of each drilled location, using necessary diameter drill bit for shaft of bolt, drill through remaining jamb thickness.
5) Position jambs against wall/post and using jambs as a template, mark each hole location on the wall/post. Remove jamb. At each marked location, drill hole in wall according to anchor type and size (marked on anchor or anchor packaging). Bolt depth into wall/post should typically be at least 1-1/2"
6) Insert anchors in wall/post. Position jamb against wall, aligning holes in jamb with holes in wall.
7) Screw each hex head bolt through washer and jamb and into anchors. Use socket wrench to tighten. Do not over tighten.